# E20030

## MACHINE DIMENSIONS

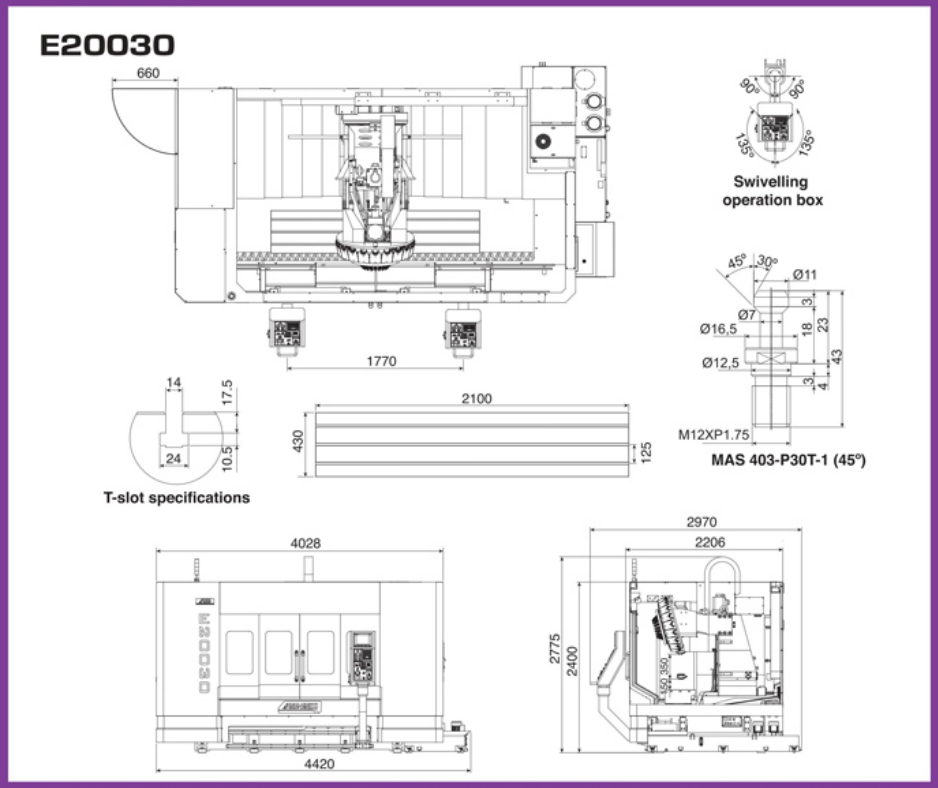


※ The company reserves the right to modify the specifications / design, subject to change without further notice. Actual specifications, based on order content.

### Standard accessories

- Auto. Lubrication system
- Tool coolant system
- Direct drive spindle system
- Auto chip purging system
- Spindle air blow system
- 3 axes with roller guide
- PL Work light
- Triple-color alarm light
- TFT LCD
- Toolbox and tools
- Leveling bolts and pads

### Optional accessories

- Spindle speed
  12,000 / 15,000 / 20,000 / 24,000 rpm
- Coolant through spindle (CTS)
- Full enclosed splash guard (Top cover)
- Transformer / Stabilizer
- The 4th axis (CNC Rotary Table)
- The 5th axis (CNC Tilting Rotary Table)
- Chip conveyor with cart
- CTS filtration
- Oil / Water partition
- Oil mist collector
- Water gun
- Air gun
- 10.4" TFT LCD
  (Mitsubishi / Fanuc)
- Auto. door
- Auto. tool length measurement
- Damaged cutting tool sensor
- Workpiece air blow system
- CE

E20030

## MACHINE SPECIFICATIONS

| | | Unit | E20030 |
|---|---|---|---|
| Table size | | mm | 2100 x 430 |
| Max. table load | | kg | 800 |
| X, Y, Z axis travel | | mm | 2000 x 400 x 350 |
| Spindle nose to table | | mm | 150~500 |
| Spindle taper | | | BT30 |
| Pull stud | | | MAS403 P30T-1 (45°) |
| Spindle motor | Mitsubishi<br>Fanuc<br>Siemens | kw<br>kw<br>kw | 5.5 / 3.7<br>5.5 / 3.7<br>5.6 / 3.7 |
| X drive motor | Mitsubishi<br>Fanuc<br>Siemens | kw<br>kw<br>kw | 3.0<br>3.0<br>3.3 |
| Y drive motor | Mitsubishi<br>Fanuc<br>Siemens | kw<br>kw<br>kw | 1.5<br>1.6<br>2.3 |
| Z drive motor | Mitsubishi<br>Fanuc<br>Siemens | kw<br>kw<br>kw | 3.0<br>3.0<br>3.3 |
| Spindle speed | | rpm | 10000 |
| X, Y, Z axis rapid traverse | | m/min | 36 / 48 / 60 |
| Tools capacity | | pcs | 20 |
| Max. tool weight | | kg | 3 |
| Max. tool length | | mm | 200 |
| ATC time(T-T) | | sec. | 2.2 |
| Tank volume | | L | 292 |
| Net weight | | kg | 7800 |
| Floor space | | mm | 4420 x 2970 x 2775 |

## CONTROLLER SPECIFICATIONS

O : standard OP : option

| | Mitsubishi | Fanuc | Siemens |
|---|---|---|---|
| Max. simultaneous axis | 4 | 4 | 4 |
| Standard controlled axis | 4 | 4 | 4 |
| Program storage length | 500 kb | 512 kb | 5M |
| Work piece coordinates | 54 | 54 | 100 |
| Max. variable number | 700 | 600 | 300 |
| Tool offset pairs | 400 | 400 | 128/256 |
| Conversational programming | NAVI | Manual Guide 0i | Program Guide / Shopmill (OP) |
| Monitor | 8.4" TFT LCD / 10.4" TFT LCD (OP) | | 10.4" TFT LCD |
| Multi-language display | O | O | O |
| ABS servo motor | O | O | O |
| Tool length compensation | O | O | O |
| Tool radius compensation | O | O | O |
| On-screen drafting | O | O | O |
| High speed data server & ethernet | O | OP | O |
| High speed &high accuracy machining control mode | G05 P10000 | G05.1 Q1 | CYCLE832 |
| Intelface | RS232/RJ45 | | RJ45 |
| Memory card input / output | O | O | O |
| USB input / output | O | O | O |

※ Tool change time supplied with Mitsubishi controller and standard 60Hz power.
For electrical requirements other than this standard, please contact one of our personnel.